Swedish Neutral

Premium Power Protection

Earth Fault Locator

with

Automatic Arc Suppression Coil Tuning

SN-NM-A1

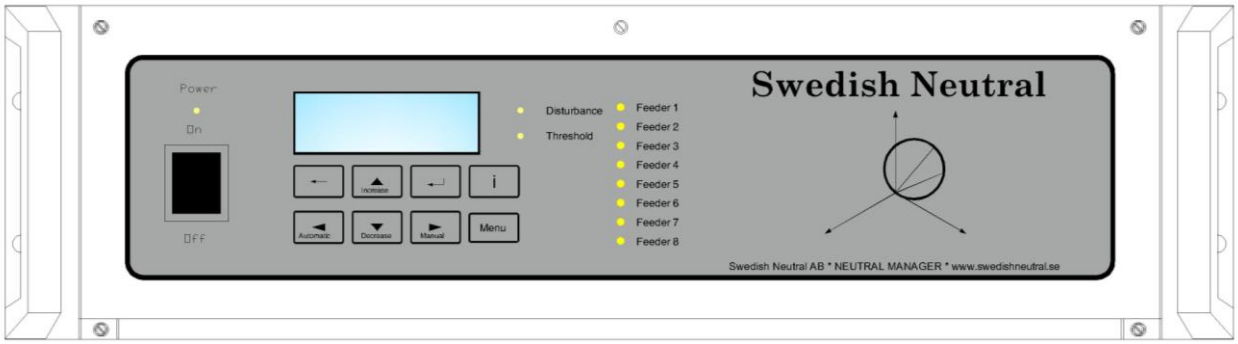

Introduction

The Swedish Neutral **Earth Fault Locator** with Automatic Arc Suppression Coil Tuning is designed to operate in resonance grounded networks.

Resonance grounding by Petersen coils (Arc Suppression Coils) has been used in Scandinavia and other European countries for some eighty years. The excellent properties of this grounding concept are mirrored by very low outages rates.

The Arc Suppression Coil is used to minimize the capacitive earth fault current flowing during an earth fault. To enable the Arc Suppression Coil to do its job accurately (minimizing current in the case of an earth fault) the coil needs to be tuned to the network. Combining the Arc Suppression Coil with Automatic Arc Suppression Coil Tuning will ensure that the Arc Suppression Coil is adequately tuned at all times, regardless of changes in the network.

When an earth fault occurs it needs to be localized. The Swedish Neutral **Earth Fault Locator** localizes the faulty feeder with highest sensitivity without the need for a Neutral Earthing resistor (which increases the earth fault current) thus enabling safer earth fault handling.

Earth Fault Locator

The Swedish Neutral **Earth Fault Locator** offers you the following advantages;

- Fast, reliable and sensitive earth fault location
- Works without a Neutral Earthing Resistor – *keeps the earth fault current to a minimum!*
- Integrated Automatic Arc Suppression Coil Tuning capable of tuning all types of Arc Suppression Coils
- Earth fault detection for 8 feeders and Automatic Arc Suppression Coil Tuning in one 19” rack
- Additional feeders in slave racks (14 additional feeders / slave rack)
- Distance to earth fault
- Feeder indication with possibility to trip the faulty feeder
- Earth fault location with detection of high impedance earth faults
- Remote connection via protocol or modem

Earth Fault Locator HMI

The **Earth Fault Locator** comes with a panel for local control. The HMI enables local control and monitoring of the **Earth Fault Locator**.

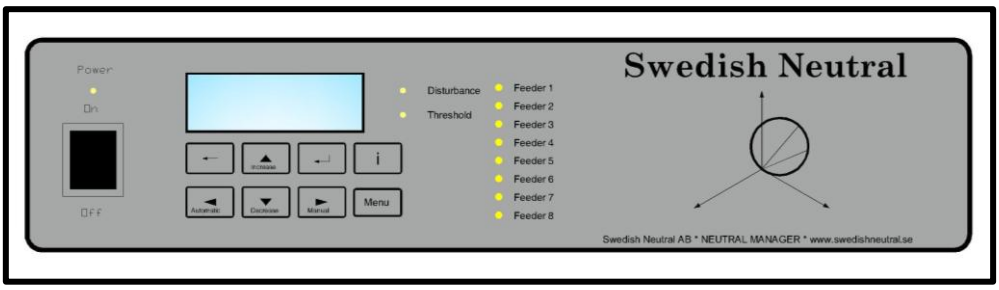

From the local control panel you can;

- ✓ Switch between *Manual* and *Automatic* operating modes
- ✓ Adjust the Arc Suppression Coil up and down using the Increase / Decrease buttons
- ✓ **Monitor / acknowledge alarms and view network parameters including;**
- ✓ LEDs for earth fault feeder indication
- ✓ Two separate LEDs for group alarms
- ✓ In the event of an alarm *"X Alarm(s)"* will be displayed in the LCD. The information button can be pushed for additional information regarding the alarm
- ✓ Alarms are grouped in two different categories "Threshold" and "Disturbance"
- ✓ Confirmation of alarms via the panel

Earth Fault Locator Cable Plan

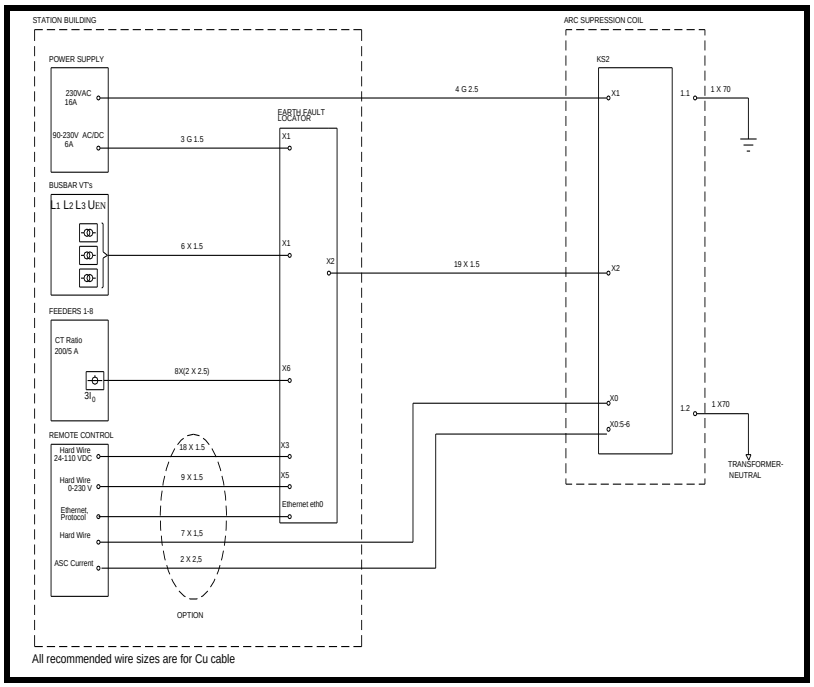

Earth Fault Locator Single Line Diagram

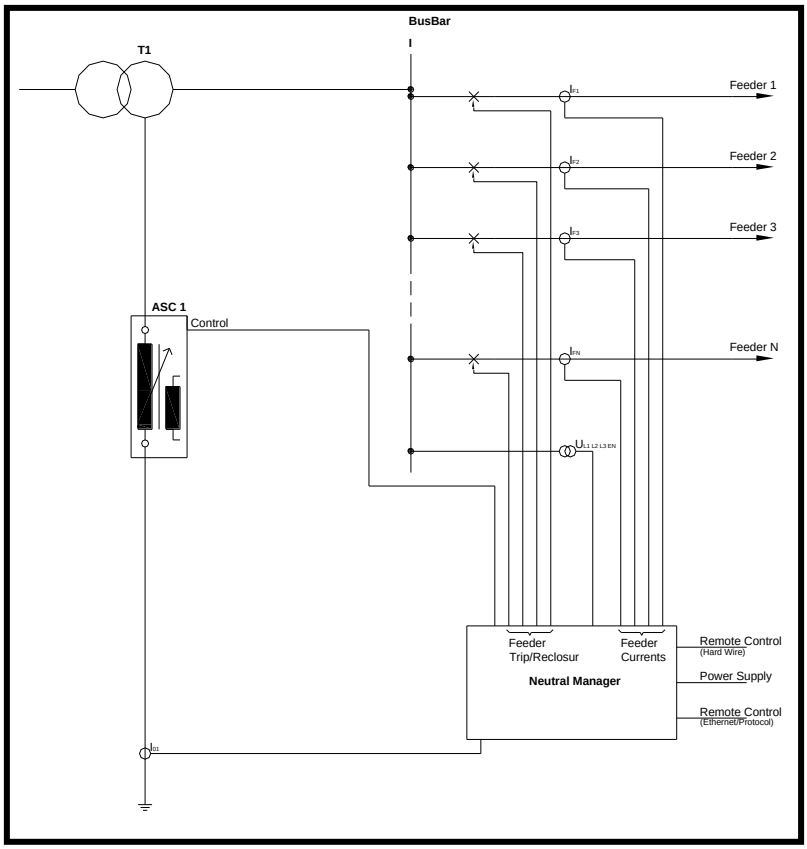

Earth Fault Locator

Earth fault detection and locating schemes

The Swedish Neutral **Earth Fault Locator** includes fast, reliable and highly sensitive algorithms for earth faults detection. Common for the algorithms is the use of neutral voltage (U_{EN}) and feeder summation currents as detection criteria.

The fastest algorithm for earth fault detection is the ***Initial Transient Detection Scheme***. The faulty feeder can be identified instantly at the start of the earth fault. The detection scheme is very robust for low impedance faults but is limited in high impedance faults due to the transient amplitude not being high.

The ***Adaptive Zero Sequence Admittance Scheme*** can be applied on any type of earth fault, regardless of fault impedance. The measurements are taken before and after the switching of a capacitive element of the Arc Suppression Coil. As the scheme employs a differential measurement the errors in CTs and VTs are eliminated. The scheme is a highly sensitive measurement and can detect high impedance faults where traditional polarized measurement schemes fail.

Initial transient detection scheme

In the event of an earth fault in a HV grid the re-charge of the capacitive currents produces an initial transient. The initial transient consists of two stages; a *discharging* transient is followed by a *charging* transient.

The frequency of the *discharging* transient varies between 10 – 100kHz and is not possible to measure with standard current transformers, while the frequency of the *charging* transient varies between 100Hz – 2kHz and can be measured with standard current transformers.

The Swedish Neutral initial transient algorithm is measuring and evaluating the *charging* transient. U_{EN} (neutral to ground voltage) and the summation currents on the outgoing feeders are measured. Using a polarized measurement the faulty feeder can easily be discriminated, see below.

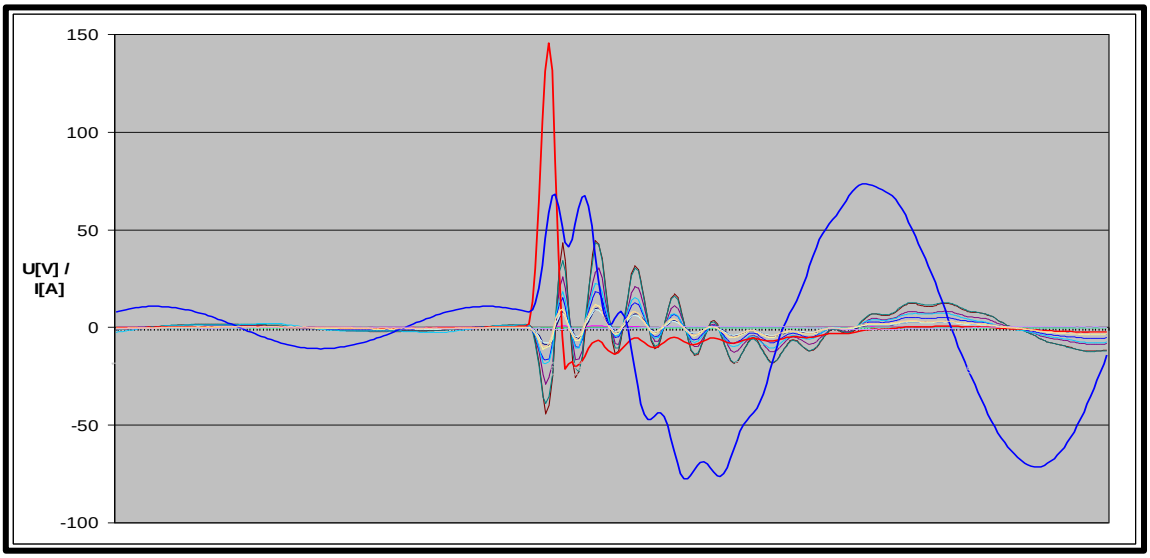

Initial charging transient

The current in the transient of the faulty feeder and U_{EN} is 180 degrees opposite in phase to the fault free feeders. The current in the faulty feeder is the sum of all fault free feeders, hence the large amplitude. In the figure above the faulty feeder is the **red** curve and U_{EN} is the **blue** curve.

Depending on the impedance and the distance to the fault the frequency and the amplitude of the transient varies. In an earth fault with some fault impedance the discrimination becomes more difficult. The thresholds for U_{EN} and the transient current is adjustable by parameters in the software.

The fault locating scheme based on the initial transient is a very fast and reliable detection scheme for low impedance earth faults.

The benefits of the ***Initial Transient Detection Scheme*** are

- Instant (fast) feeder identification on transient flash-over faults
- No Neutral Earthing Resistor required *(keeps the earth fault current to a minimum!)*
- Distinct and reliable discrimination of the faulty feeder

Adaptive zero sequence admittance scheme

The identification of the faulty feeder using the ***Adaptive Zero Sequence Admittance Scheme*** is based on two subsequent measurements of the individual feeder zero sequence admittances (3Io / 3Uo).

The measurements are taken before and after fault interception or before and after switching one of the capacitive elements of the Arc Suppression Coil.

On the *faulty* feeder a *change* of admittance can be measured when switching the capacitive element on the Arc Suppression Coil. The admittance on the *fault free feeders* remains *unchanged* during the switching. The scheme works regardless of fault impedance.

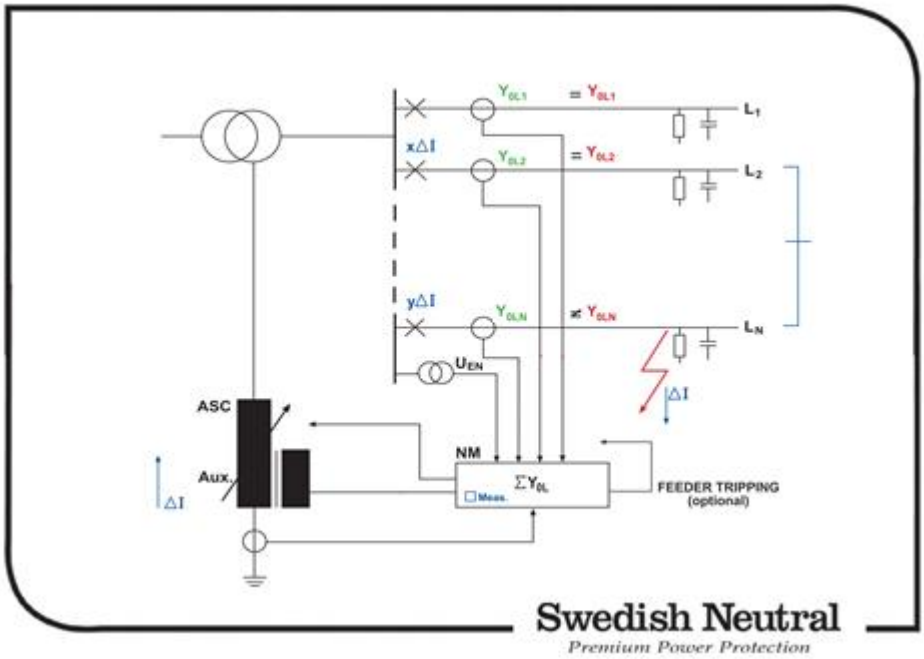

Adaptive zero sequence admittance

The ***Adaptive Zero Sequence Admittance Scheme*** offers the following advantages compared to traditional polarized measurement:

- Works independent of Arc Suppression Coil mismatch
- No Neutral Earthing Resistor required *(keeps the earth fault current to a minimum!)*
- Differential scheme - eliminates CT and VT errors
- Works in radial as well as meshed network structures
- Suitable for full scheme GFN and/or (backup) tripping
- Distance to fault measurement in network loops
- Highly sensitive fault detection

Distance to fault measurement

During a permanent earth fault, the faulty feeder is indicated on the local control panel, SCADA, NMTerm (terminal software included in delivery) and digital outputs.

If loops are possible to make in the network the ***Adaptive Zero Sequence Admittance Scheme*** can provide *distance to fault* information. The admittance measurement will give the distribution between the faulty feeders in the loop.

By pushing the button *"Fault locator"* in NMTerm the window below appears.

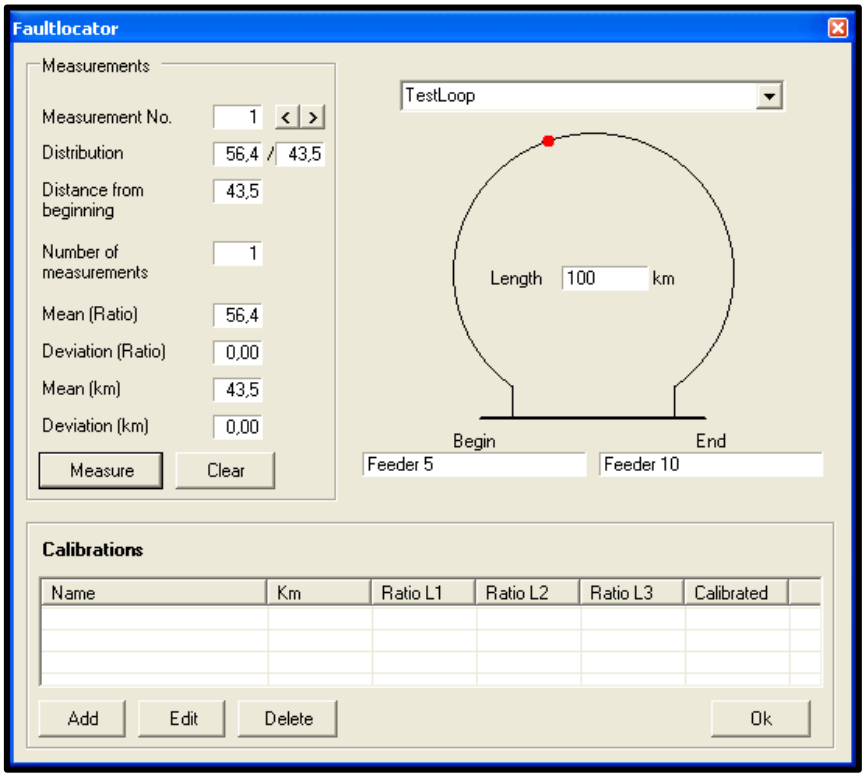

Earth fault localization - control panel window of the terminal software

Once the loop has been connected, measurements can be carried out using NMTerm. Pre-defined loops shall be entered and stored in NMTerm prior to the earth fault. It is also possible to enter the loops during an ongoing earth fault.

The ***Adaptive Zero Sequence Admittance Scheme*** gives the proportional current distribution between the two feeders. *"Mean (km)"* gives the distance to the fault from the start of the first feeder in the loop.

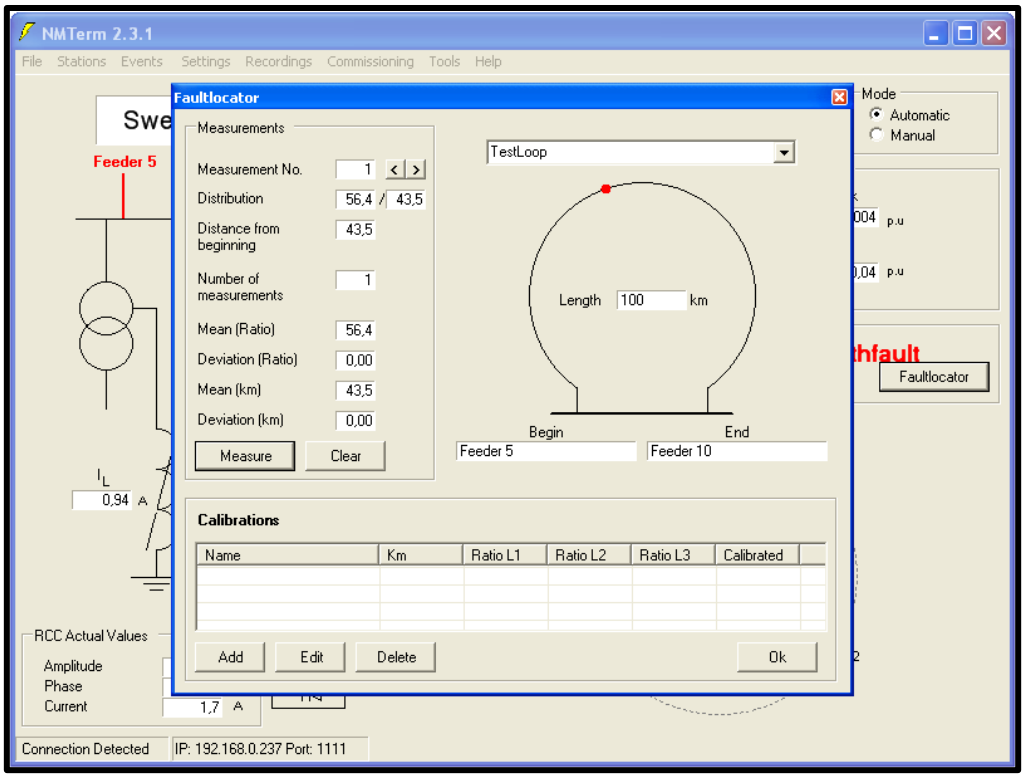

Earth fault locator

The selected loop for the distance measurement is shown on the right half of the screen. The loop contains a number of previously defined reference points. A reference points can be, for example, a sectionalizer, a substation or important junctions. The network data is found in the table on the left side of the screen.

The fault current is distributed between the two feeders, in inverse proportion to their length impedance. There is a correlation between the earth fault site and the current distribution.

It is recommended that every network loop in the database has at least two or three calibrated reference points in order to ensure the required accuracy for distance calculation.

Once the earth fault has been localized to a feeder section, the exact position on the feeder can be localized using a ground microphone to identify the acoustic signals produced by repeated measurements.

Earth fault recordings

All earth faults are recorded and stored in the **Earth Fault Locator**. The records can be extracted and evaluated using NMTerm.

Basic Theory

Automatic Arc Suppression Coil Tuning

To reduce the capacitive fault current during an earth fault effectively the Arc Suppression Coil needs to be tuned to the capacitive leakage of the network at the time of the earth fault. The capacitive leakage to ground is determined by the present size of the network, which in turn is determined by the number of feeders, overhead/cable, length of the feeders and other factors.

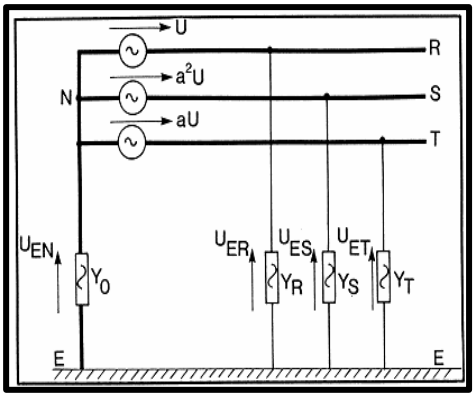

Three-phase system with its equivalent connections to earth

The capacitive leakage in a network can change for different reasons. One example is when a feeder is disconnected (reducing the sum of the capacitive leakage of the network); another is when an additional feeder is connected to the network (increasing the sum of the capacitive leakage of the network). When this happens the Arc Suppression Coil needs to be adjusted to a new position to compensate for the new total capacitive leakage of the network.

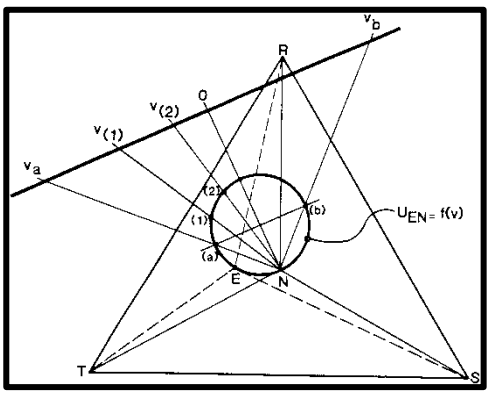

Locus curve U (EN) = f (v)

This is done automatically using the **Automatic Arc Suppression Coil Tuning** which continuously monitors the network and tunes the Arc Suppression Coil to the correct value. The Swedish Neutral **Automatic Arc Suppression Coil Tuning** employs the Locus Measurement which enables very fast and accurate retuning of the Arc Suppression Coil.

Automatic Arc Suppression Coil Tuning

In *Manual* mode the Arc Suppression Coil can be set manually using the local control panel of the system. The Arc Suppression Coil can also be manually controlled from a standard PC using the terminal software (NMterm) included in the delivery. To remotely control the Arc Suppression Coil, protocol connection (serial or network), modem or digital inputs can be used.

In *Automatic* mode the system will automatically adjust the Arc Suppression Coil to the resonance point.

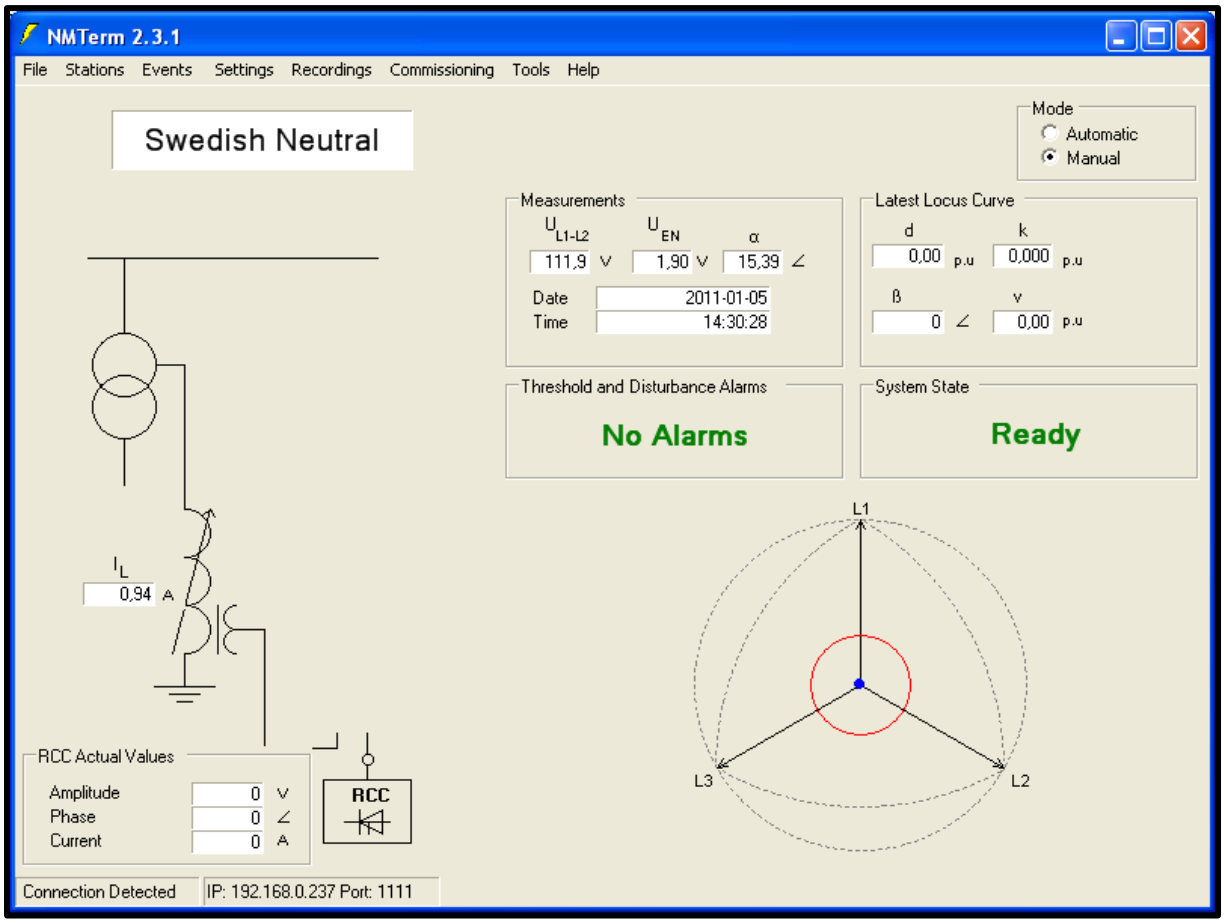

NMTerm enables easy access to the different features of the **Earth Fault Locator**. NMTerm can be installed on any PC using a Windows operating system.

NOTE: for further information regarding Automatic Arc Suppression Coil Tuning refer to the downloadable PDF *"Automatic Tuning Device Technical Specification"* available at www.swedishneutral.se.

Earth Fault Locator Digital and Analog Board Specifications

Analog input board (AI)

Current Inputs

Current input	1, 2, 5 A
Operating range	Selected at order
Burden	< 0.1 VA (0.1 Ω) @ 1 A
	< 0.2 VA (0.05 Ω) @ 2 A
	< 0.5 VA (0.02 Ω) @ 5 A
Terminal withstand	1 s @ 20 x rated current
	2 s @ 10 x rated current
	Continuous @ 2 x rated current (10A)
Insulation level	>1 kV 1s (IEC 60204-1:1997)

Voltage Inputs

Voltage input	**0 – 110 VAC**
Burden	**< 0.x VA (0.x Ω)**
Insulation level	**>1 kV 1s (IEC 60204-1:1997)**

Analogue output board (AO)

Current output 1	**0 – 20 mA DC corresponds to ARC SUPPRESSION COIL position 0-100%**
Current output 2	**0 – 16 – 20 mA DC corresponds to Neutral Voltage 0-10-100%**
Insulation level	**>1 kV 1s (IEC 60204-1:1997)**

Digital input board (DI)

24-110 V model

Input voltage	**Input 1-8: 19-40 (min-max) VDC**
	Input 9-16: 20-140 (min-max) VDC
Burden	**Input 1-8: 0.32 VA (1.8 k Ω) @ 24 VDC**
	Input 9-16: 0.59 VA (20.4 k Ω) @ 110 VDC
Insulation level	**>1 kV 1s (IEC 60204-1:1997)**

110-220 V model

Input voltage	**Input 1-8: 19-40 (min-max) VDC**
	Input 9-16: 72-250 (min-max) VDC
Burden	**Input 1-8: 0.32 VA (1.8 k Ω) @ 24 VDC**
	Input 9-16: 0.53 VA (91 k Ω) @ 220 VDC
Insulation level	**>1 kV 1s (IEC 60204-1:1997)**

Digital output board (DO)

Switching voltage	**0-250 VAC/DC**
Max continuous current load	**6 A**
Insulation level	**>1 kV 1s (IEC 60204-1:1997)**

Standard Protocols Interoperability Reference

Protocols

The **Earth Fault Locator** can be controlled and monitored though protocol. Protocols supported by the **Earth Fault Locator** listed below.

IEC103

Ref.	Client system		Remark
	Vendor	Type	
1	Siemens	SINAUT	
2	Siemens	SICAM PAS	
3	Areva		
4	Cybectec	SMP	Tested in SN Lab.
5	ABB		
6	Foxboro	C 50	
7	Foxboro	SCD 5200	

IEC61850

Ref.	Client system		Remark
	Vendor	Type	
1	Siemens	SICAM PAS V5.11	2007
2	Siemens	SICAM PAS V6.0	2009
3	Areva	C264C	2009
4	ABB	RTU 560	2010

IEC104

Ref.	Client system		Remark
	Vendor	Type	
1	Cybectec	SMP	Tested in SN Lab.
2	ABB	800xA With OPC Server: Matrikon 1.0.4.0	2010 May

DNP 3

Note: By means of external IEC103/DNP3 protocol converter.

Ref.	Client system		Remark
	Vendor	Type	
1	Cybectec	SMP	Tested in SN Lab.
2	Abbey Systems		

SPA

Ref.	Client system		Remark
	Vendor	Type	
1	Cybectec	SMP	Tested in SN Lab.
2	ABB		

Swedish Neutral

Premium Power Protection

Contact and visiting us:

Swedish Neutral AB

Västra Rydsvägen 122

19631 Kungsängen

Sweden

Telephone +46 8 581 71344

Fax: +46 8 581 713 44

E-mail: mail@swedishneutral.se

www.swedishneutral.se